PRODUCT SHEET

Drain Unit 1004: Rear flange – +6 mm

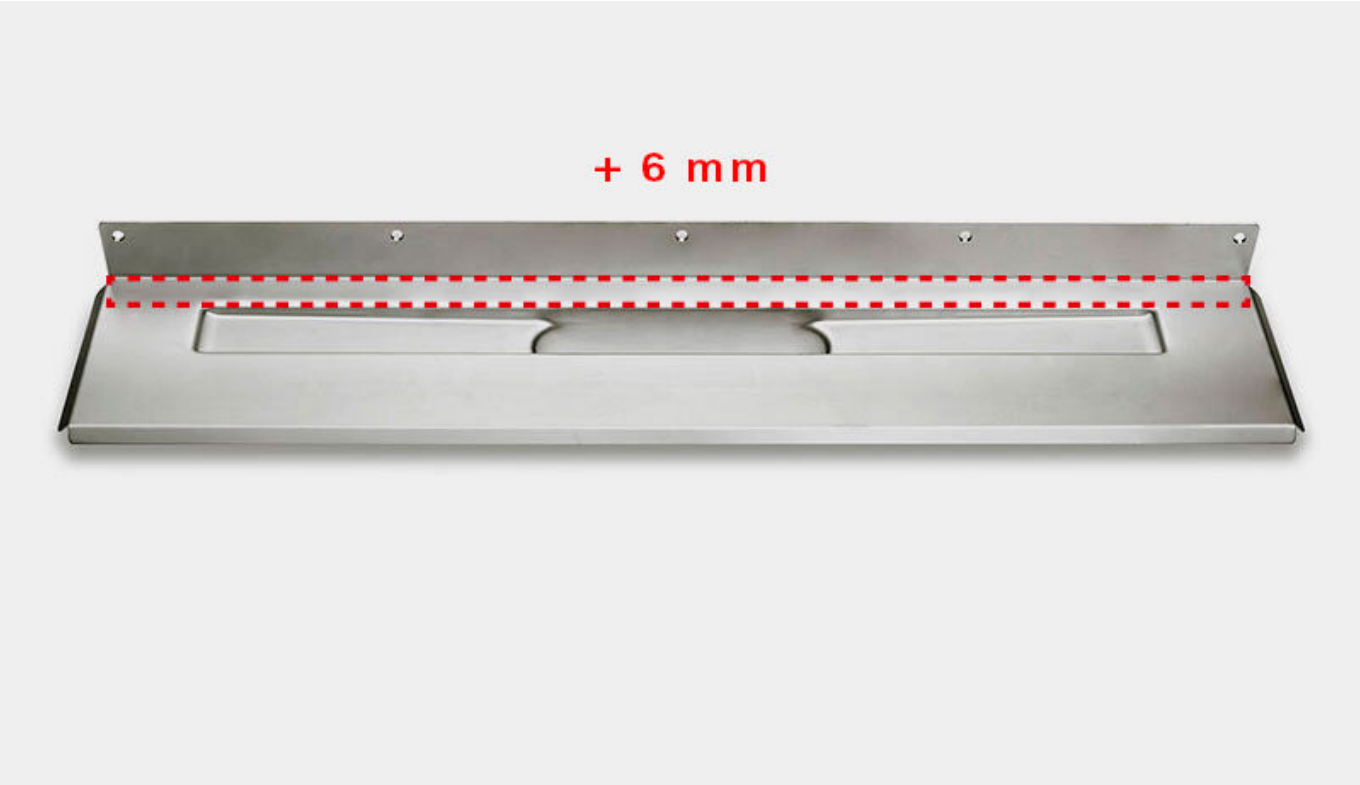

SKU 1004.0301
VVS Number 155000503SKU 1004.0701
VVS Number 155000507SKU 1004.0801
VVS Number 155000508SKU 1004.0901
VVS Number 155000509SKU 1004.1001
VVS Number 155000510SKU 1004.1201
VVS Number 155000512

Can be freely positioned against the back wall, independent of any side walls. The rear flange has been moved 6 mm backwards, to fit 6 – 20mm wall tiles + tile mortar + wetroom membrane.

NB! Only for HighLine Custom frameless.

Drain Unit 1004: Rear flange – +6 mm – Drain unit, 300 mm with extra deep back flange 6 mm for HighLine

Custom frameless

Size	Item Number	VVS Number
300	1004.0301	155000503

Floor Construction	Net Weight	Weight Packaging Base
All	1.1200	1.3

Material	Floor Covering	Center
Stainless steel (AISI 304)	Tiles	216

Construction Height	Depth	Length
12	156	432

Frame	Height	Surface
315	92	Pickled

Installation Length	Membrane
432	Liquid

Drain Unit 1004: Rear flange – +6 mm – Drain unit, 700 mm with extra deep back flange 6 mm for HighLine Custom frameless

Size	Item Number	VVS Number
700	1004.0701	155000507

Floor Construction	Net Weight	Weight Packaging Base
All	2.28	2.41

Material	Floor Covering	Center

Stainless steel (AISI 304)	Tiles	406
Construction Height	**Depth**	**Length**
17	156	812
Frame	**Height**	**Surface**
695	97	Pickled
Installation Length	**Membrane**	
812	Liquid	

Drain Unit 1004: Rear flange – +6 mm – Drain unit, 800 mm with extra deep back flange 6 mm for HighLine Custom frameless

Size	**Item Number**	**VVS Number**
800	1004.0801	155000508
Floor Construction	**Net Weight**	**Weight Packaging Base**
All	2.38	2.67
Material	**Floor Covering**	**Center**
Stainless steel (AISI 304)	Tiles	456
Construction Height	**Depth**	**Length**
18	156	912
Frame	**Height**	**Surface**
795	98	Pickled
Installation		

Length
912

Membrane
Liquid

Drain Unit 1004: Rear flange – +6 mm – Drain unit, 900 mm with extra deep back flange 6 mm for HighLine Custom frameless

Size
900

Item Number
1004.0901

VVS Number
155000509

Floor Construction
All

Net Weight
2.38

Weight Packaging Base
3.01

Material
Stainless steel (AISI 304)

Floor Covering
Tiles

Center
506

Construction Height
19

Depth
156

Length
1012

Frame
895

Height
63

Surface
Pickled

Installation Length
1012

Membrane
Liquid

Drain Unit 1004: Rear flange – +6 mm – Drain unit, 1000 mm with extra deep back flange 6 mm for HighLine Custom frameless

Size

Item Number

VVS Number

1000	1004.1001	155000510

Floor Construction	Net Weight	Weight Packaging Base
All	2.89	3.3

Material	Floor Covering	Center
Stainless steel (AISI 304)	Tiles	556

Construction Height	Depth	Length
20	156	1112

Frame	Height	Surface
995	100	Pickled

Installation Length	Membrane
1112	Liquid

Drain Unit 1004: Rear flange – +6 mm – Drain unit, 1200 mm with extra deep back flange 6 mm for HighLine Custom frameless

Size	Item Number	VVS Number
1200	1004.1201	155000512

Floor Construction	Net Weight	Weight Packaging Base
All	0.9000	3.9

Material	Floor Covering	Center
Stainless steel (AISI 304)	Tiles	656

Construction

Height
22

Depth
156

Length
1312

Frame
1195

Height
102

Surface
Pickled

Installation Length
1312

Membrane
Liquid

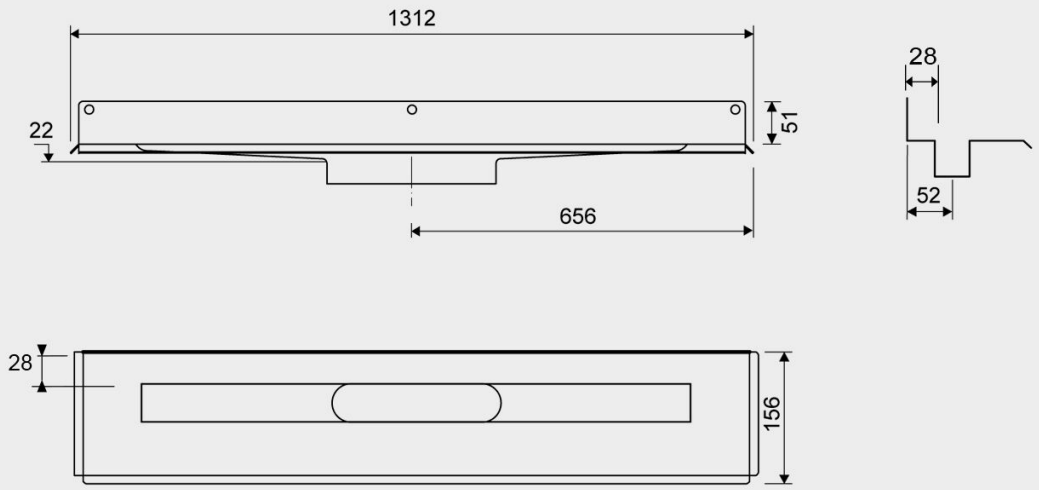
1312
22
51
656
28
52
28
156